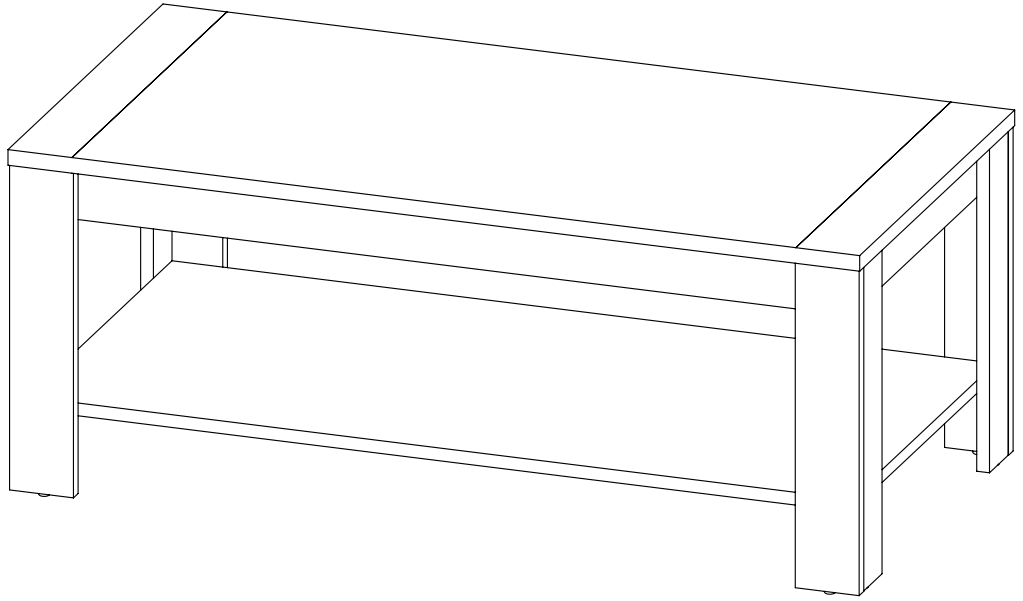

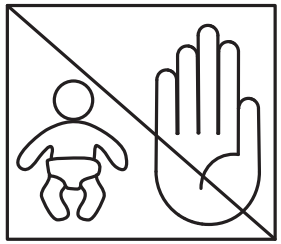

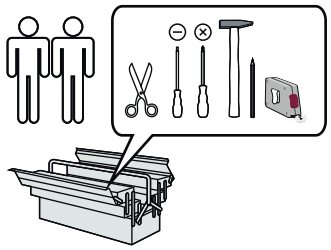

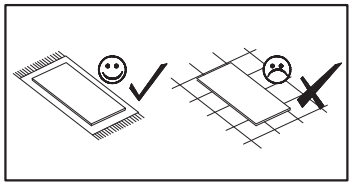
100%
COTTON

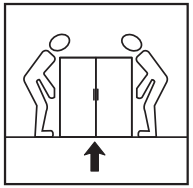

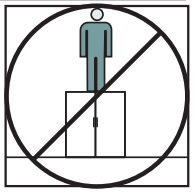

B1	ϕ 8x28	x12
T1		x20
M1		x20
C2	ϕ 20	x8
S30	5x30	x16
F15		x8

Nr	Ausmaß			St
1	1160	72	18	2
2	524	72	18	2
3	1160	560	18	1
4	1200	600	22	1
5	458	90	18	2
6	458	90	18	2
7	458	72	18	4

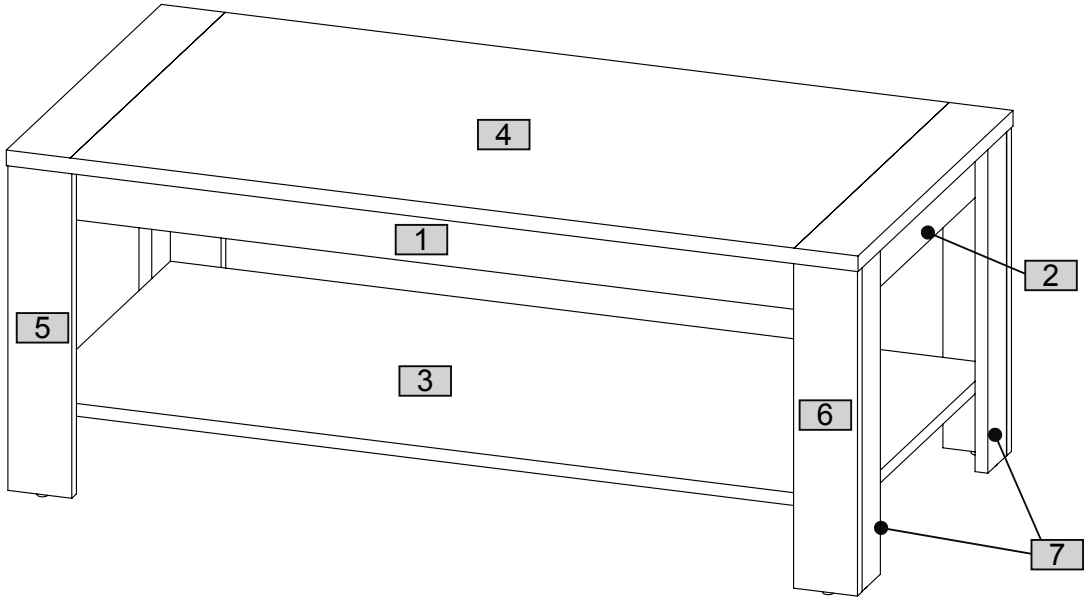

0 10 20 30 40 50 60 70 80 90 100 110 120 130 140 150 160 170 180 190 200

1

B1 ϕ 8x28 x12

T1 x20

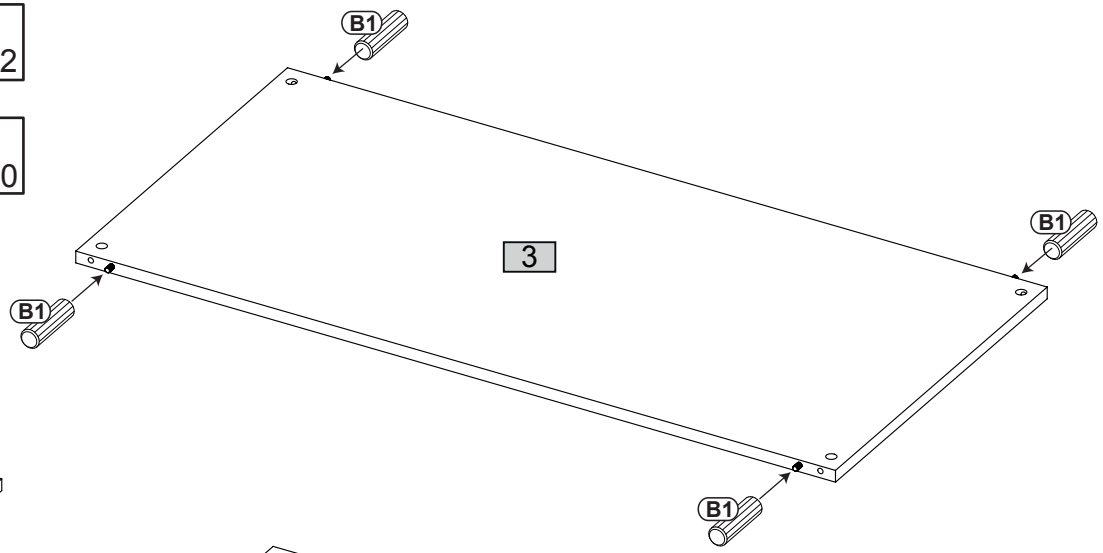

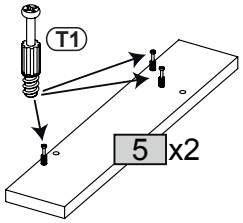

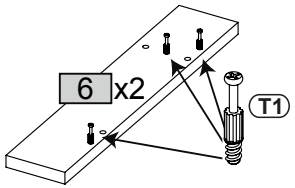

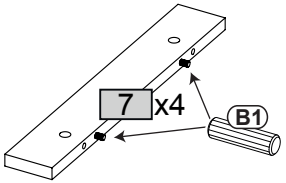

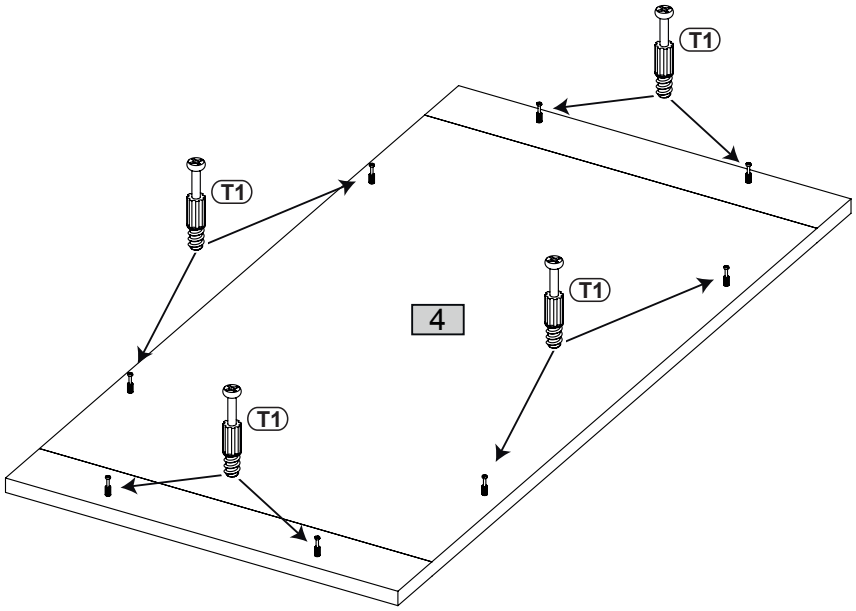

2

M1 x8

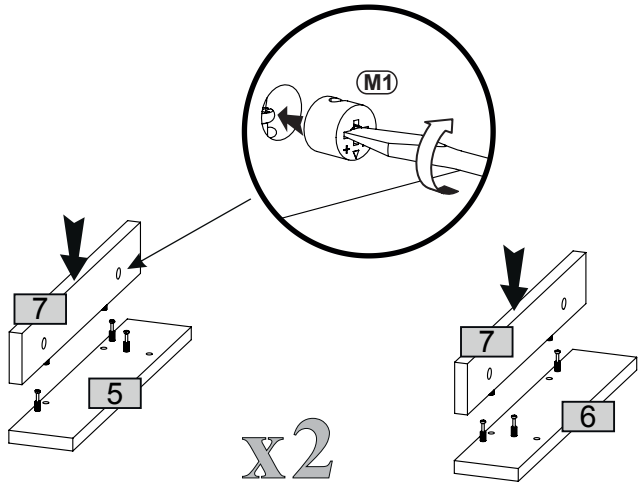

3

S30 5x30 x8

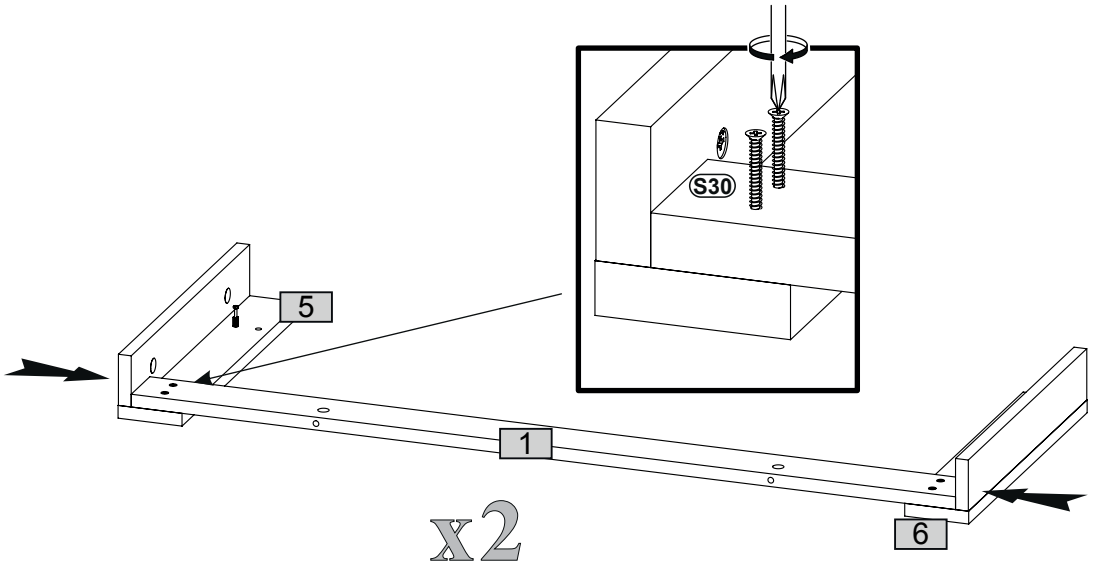

4

M1 x4

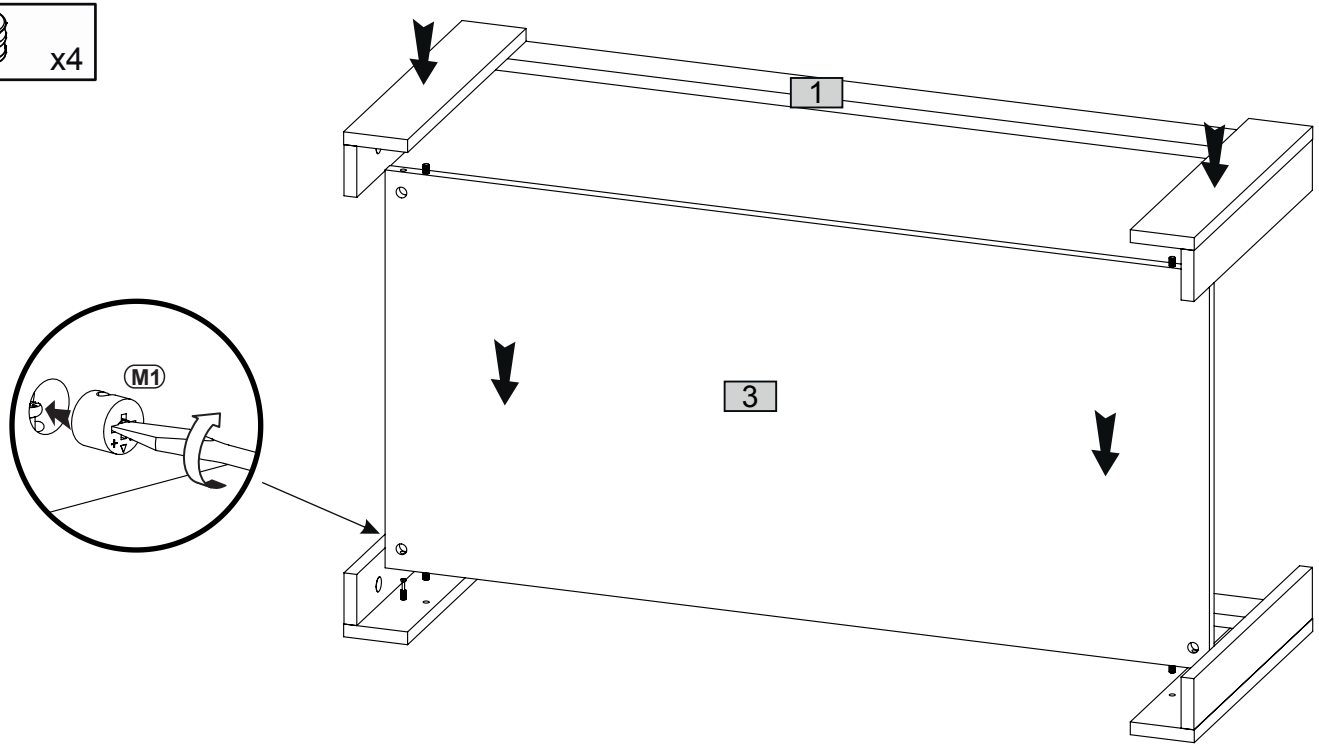

5

S30 5x30 x4

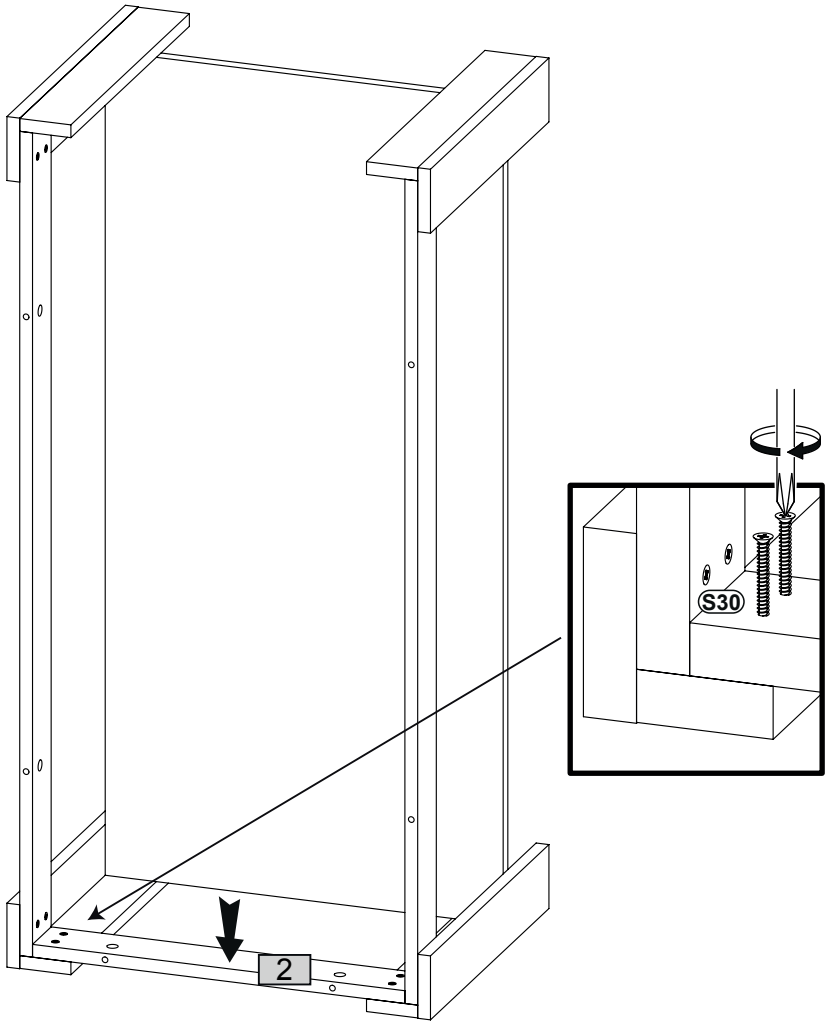

180°

6

S30 5x30 x4

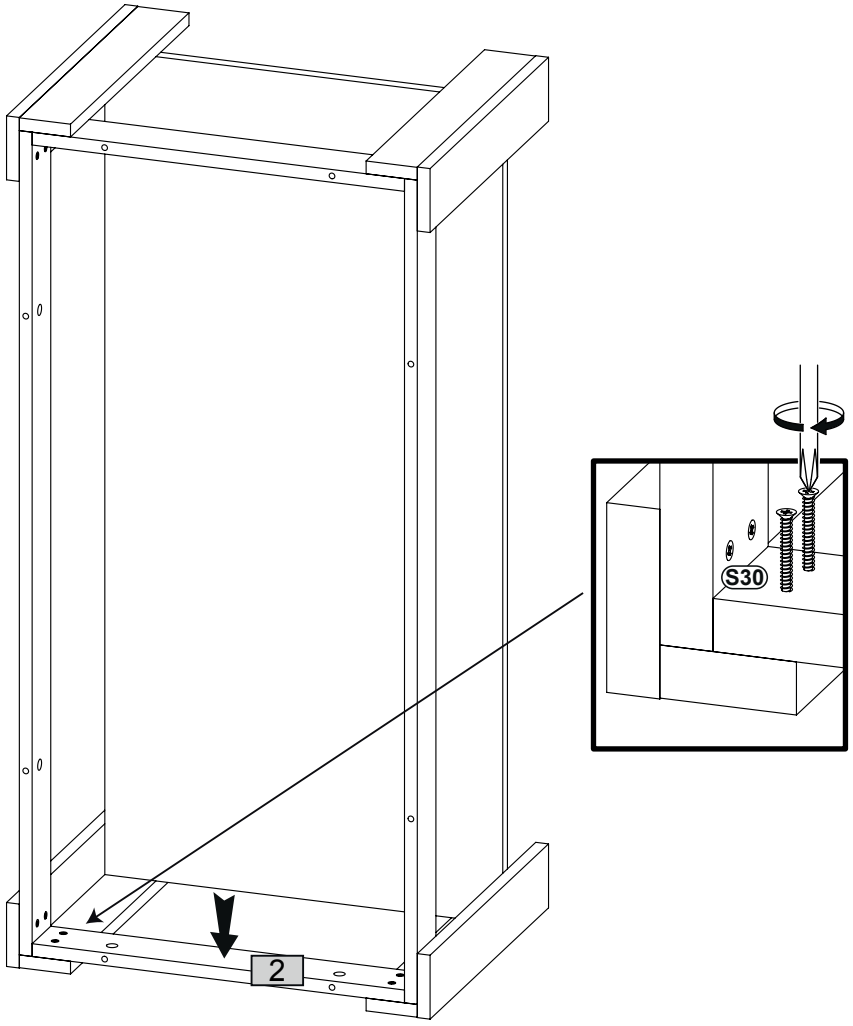

7

M1 x8

F15 x8

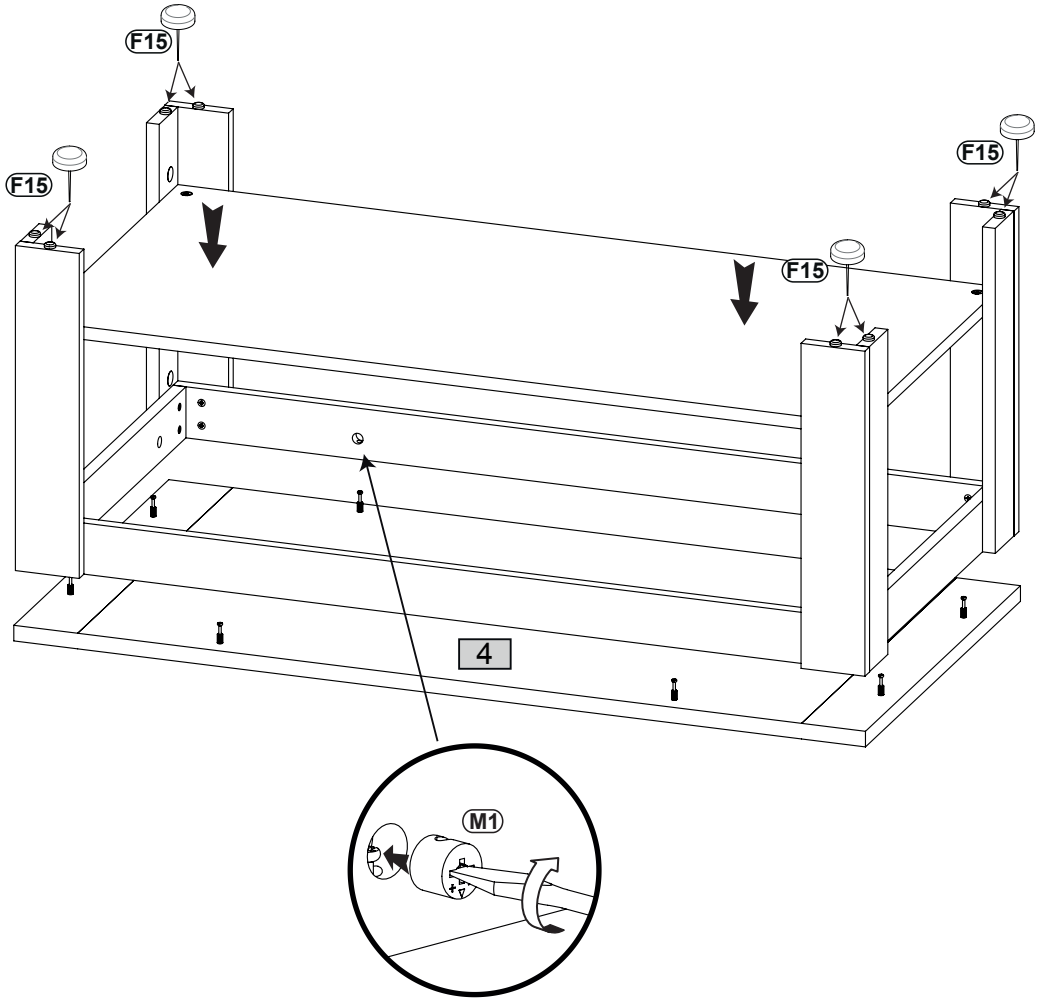
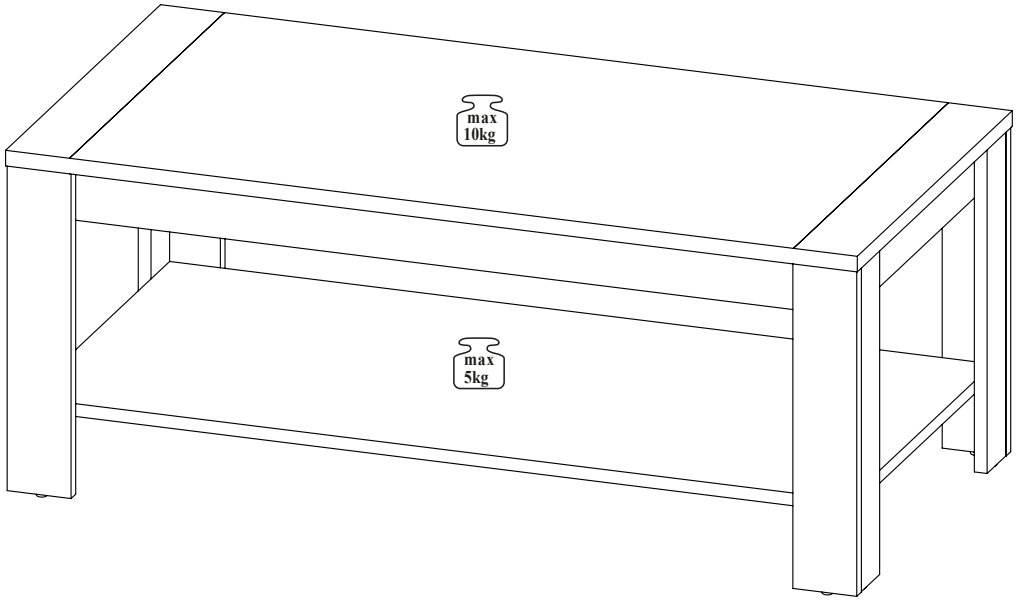
8